AUSTROFLAMM PALLAS BACK

Ver más información online

PALLAS BACK

AUSTROFLAMM

www.austroflamm.com

FORJAS SALVADOR
www.forjas-salvador.com

FORJAS SALVADOR
www.forjas-salvador.com

PALLAS BACK

AUSTROFLAMM

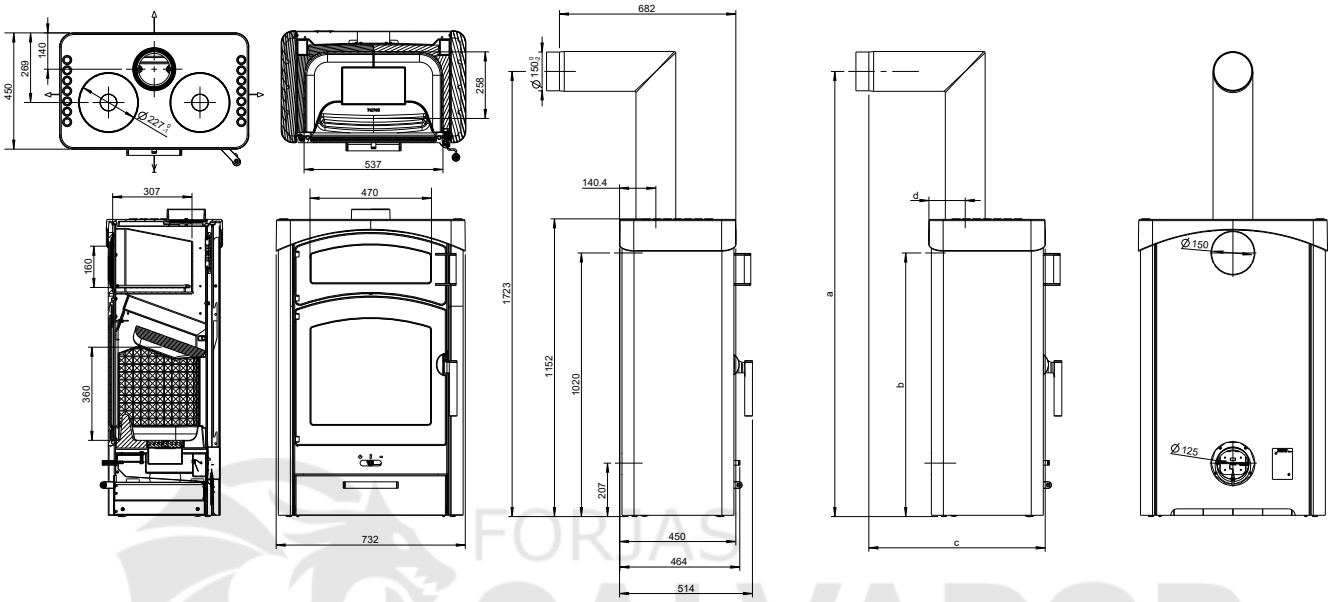

DIMENSIONS AND WEIGHTS

Steel casing (STM) h x w x d [mm]	1152 x 732 x 450
Ceramic casing (KMG) h x w x d [mm]	1152 x 732 x 450
Soapstone casing (SPM) h x w x d [mm]	1152 x 732 x 450
Firebox h x w x d [mm]	360 x 537 x 258
Weight STM [kg]	193 / 223 / 319
Weight HMS [kg]	85,5
Flue pipe outlet [mm]	150
Flue pipe connection, middle [mm]	1020
Baking compartment h x w x d [mm]	160 x 470 x 307
Dimensions a, b, c, d [mm]	1723 / 1020 / 682 / 140,4
Safety distances to combustible materials front / side / rear [mm]	800 / 200 / 200

HEAT OUTPUT

Nominal heat output under EN 13240 [kW]	9
Min. / max. heat output [kW]	4.5 / 13
Space heating capacity (depending on the building insulation)[m³]	114 - 305
Energy efficiency category	A

FITTINGS

XTRA heat storage technology	-
Heat Memory System (HMS)	Z
Flat bed firing	Z
external air connection / balanced flue operation	rear

DATA FOR THE CHIMNEY SWEEP

Total flue gas flow, closed [g/s]	9.2
Flue gas temperature, closed [°C]	310
Minimum feed pressure at nominal heat efficiency, closed [Pa]	12
at 0.8 times nominal heat efficiency [Pa]	10

Stand 11/2021 051014
Technical and visual modifications, typographical and printer errors reserved

o standard Z Accessories - not available

FORJAS SALVADOR
www.forjas-salvador.com